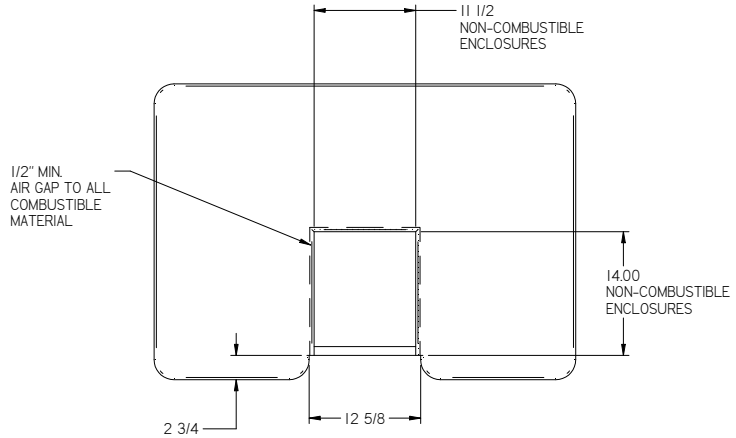

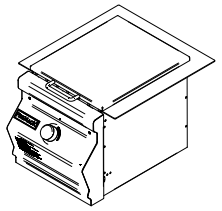

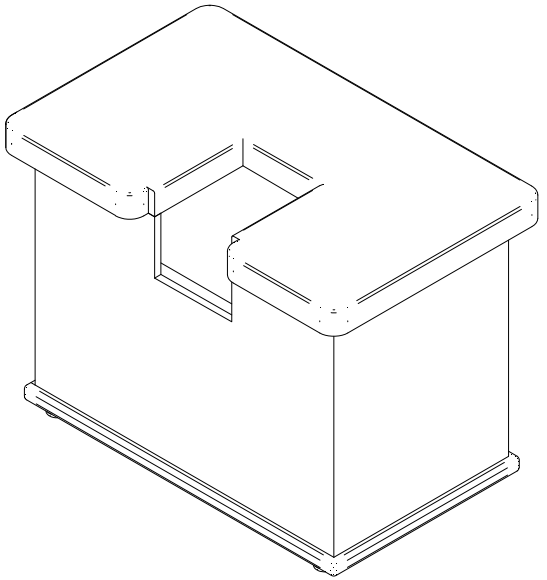

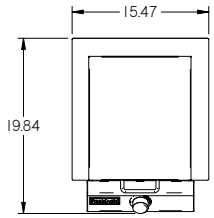

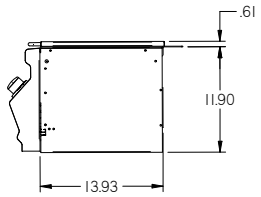

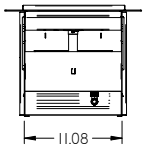

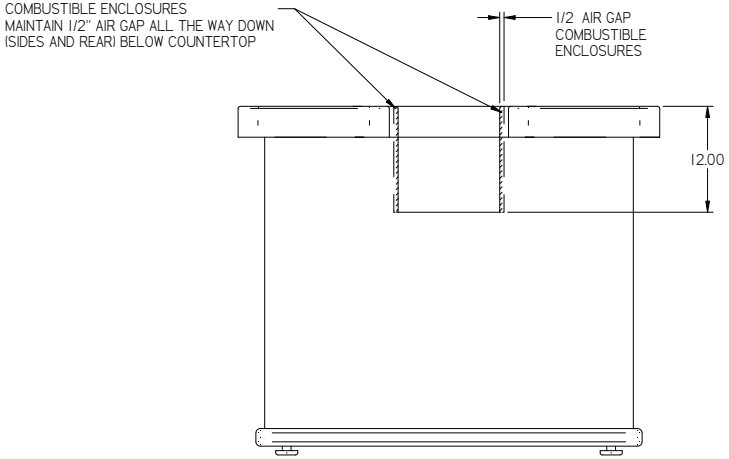

AURORA
SINGLE SIDE BURNER